Clean Energy Consultancy Limited

Energy, Renewable Technologies & Biofuel Heating Specialists

BRE
Community Sustainable Energy Programme

Project Development Study

Wreningham Village Hall

Prepared on Behalf

Of

Wreningham Village Hall

Trustees

Charity No: 284991

April 2009

Poppylot House Wymondham Road Bunwell Norfolk NR16 1NB
Email:cleanenergy@homecall.co.uk Tel: 07886 562483. Registered No: 6425356

Contents

Report Summary

The electrical energy consumption for the village hall is around 26,000 kWh per year producing 11,161 kg CO_2 per annum at an estimated cost of £2,881 per year.

The development study considers the impact of cavity wall insulation, a 4.32 kW solar PV system and 6 kW wind turbine. The solar PV system will generate an annual energy yield of 3,340 kWh of renewable electricity displacing 3,340 kWh of grid electricity saving 1,393 kg CO_2/year. The turbine will generate an annual energy yield of 8,144 kWh of renewable electricity displacing 8,144 kWh of grid electricity saving 3,502 kg CO_2/year. The cavity wall insulation will reduce the electrical heating demand by an estimated 3,900 kWh saving 1,677 kg of CO_2 per year.

The BRE solar PV benchmark is £990/tonne CO_2. The project cost per tonne of CO_2 based upon the quotation from Solar Energy Alliance is £708/tonne CO_2. The solar PV data is lower than the BRE benchmark and therefore meets the BRE benchmark and will save the village hall £359.64[1] per year and it will produce an income for the village hall by exporting renewable electricity to the national grid and is therefore recommended.

The BRE wind turbine benchmark s £419/tonne CO_2. The project cost per tonne of CO_2 based upon the quotation from Solar Energy Alliance is £379/tonne CO_2. The wind turbine meets the BRE benchmark and is therefore also recommended.

The insulated village hall will consume an estimated 10,672 kWh compared with the present building consuming around 26,000 kWh. The renewable technologies combined with installing cavity wall insulation will result in the annual village hall energy costs reducing from the current estimated costs of £2,881 down to £1,184 and the CO_2 emissions reducing from 11,161 kg CO_2 down to 4,589 kg CO_2.

The Clean Energy Consultancy Ltd CSEP development study demonstrates the solar PV and wind turbine evaluated for the village hall, both meet the BRE benchmarks, they will save considerable carbon and energy costs and they both qualify for the CSEP grant. The report also demonstrates the additional savings and energy efficiency improvements created by the cavity wall insulation will significantly reduce the charities long term energy costs.

[1] Based on electricity averaging £0.1110/kWh (E.on Standard Electricity Plan: 14th April 2009)

Estimated Energy Usage & Emissions

The village hall currently uses an electric heating system to provide space heating, hot water, lighting, cooking and appliances. The energy usage data has been supplied by the village hall trustees and is the total amount of electricity consumed between March 2005 and April 2006 to provide the annual energy demand for the village hall per year. The annual electricity consumption over this period is 25,956 kWh per year based upon the village hall electricity invoice metre readings taken between March 2005 and April 2006.

Table 1. Annual Village Hall Energy Usage

	Energy Consumed (kWh)	**Carbon Emissions kg CO_2/yr**	**Current Annual Costs[2]**
March 2005 – April 2006 Metre No:L70E018580-01	6,613[3]	2,844	£734.04
March 2005 – April 2006 Metre No:L70E018580-02	19,343[4]	8,317	£2,147.07
Total	**25,956 kWh/Year**	**11,161 kg CO_2/yr**	**£2,881.11**

Source Appendix 1

The total energy demand for the village hall is 25,956 kWh. The estimated carbon footprint for the energy usage based on grid supplied electricity is 11,161 kg CO_2/year. See appendix 1 for the calculations.

The village hall trustees intend to consider refurbishing the village hall in terms of insulating the village halls external cavity walls as a means to reduce the village halls space heating energy consumption, annual energy costs and the village halls carbon footprint. The village hall is heated by an electric heating system. Assuming the space heating is responsible for around 75% of the village halls total energy usage, the existing electric heating consumes an estimated 19,343 kWh per year producing 8,317 kg CO2 per year. See table 1.

Insulating the buildings external cavity walls will reduce the electrical space heating demand and will subsequently reduce the village hall carbon emissions. The external walls are un-insulated and will account for an estimated 33% of the present space heating demand. It is therefore recommended that the trustee's contact trained insulation installers to survey the village hall to obtain quotations to insulate the cavity walls to minimise the space heating electrical demand and carbon emissions of the village hall.

[2] Based on Electricity @ £0.1110 (E.on Standard Electricity Plan. 14th April 2009)
[3] E.on Invoice Data
[4] E.on Invoice Data

In order that the cavity wall works are included under the CSEP grant, the cavity wall insulation specialists used must be members of the National Insulation Association (NIA) whose web site is www.nationalinsulationassociation.org.uk or the Thermal Insulation Manufacturers & Suppliers Association (TIMSA) www.timsa.org.uk. The contact details of local National Insulation Association registered installers are in Appendix 7 of the report. If the cavity walls are insulated the Cavity wall insulation will save the charity an estimated 20% of the present space heating energy demand and carbon emissions produced by the building.

Based on total annual energy demand of 26,000 kWh & assuming space heating consumes 75% of the total energy demand, the total space heating demand is estimated to be 19,500 kWh. Cavity wall insulation will therefore save an estimated 3,900 kWh of electrical energy, representing an annual carbon emission saving 1,677 kg CO2 based upon 0.43 kg CO2/kW and will save the village hall trustees an estimated £432.90 per year based upon current energy costs. See appendix 1. If energy costs increase in the future, the annual energy cost savings could be significantly increased.

The CSEP capital grant application includes cavity wall insulation. Therefore, the trustee's should obtain quotes from local NIA members to obtain additional CSEP funding.

Solar PV Energy Yields

To offset some of the village hall electricity carbon emissions and costs, it is proposed that a 4.32 kWp solar PV system is installed.

The solar PV specification quotation in Appendix 2 suggests a 4.32kW solar PV system would generate around 3,240 kWh of electricity per year. Therefore a solar PV system will generate an energy yield of 3,240 kWh per annum.

Wind Turbine Energy Yields

An alternative renewable electricity option to offset some of the village hall electricity carbon emissions and costs is a 6.0 kW Wind Turbine.

The wind turbine specification quotation in Appendix 3 suggests a 6.0 kW wind turbine system would generate around 8,144 kWh of electricity per year based upon an annual site wind speed of 5.1m/s. The site average wind speed based upon the national wind speed data base[5] suggests the site average wind speed is 5.1m/s at 10 metres above ground level, therefore a 6.0 kW turbine system will generate an average energy yield of 8,144 kWh per annum based on the sites average wind speeds.

[5] http://www.berr.gov.uk/whatwedo/energy/sources/renewables/explained/wind/windspeed-database/page27326.html

Solar PV Value for Money Evaluation

The solar PV installation cost is detailed in Appendix 2 and summarised in table 2.

Table 2. Solar PV Installation Costs

4.32 kWp Grid Connected Solar PV	Cost
Total Cost Exc VAT	£24,670.00

Solar PV Quotation Appendix 2

To determine whether the solar PV costs offer value for money compared with grid electricity, the solar PV energy yield data and costs must be compared against the BRE value for money benchmarks. These are calculated as the cost per tonne of Carbon Dioxide (CO_2) saved as per the benchmarks and calculation methodology in Appendix 4 of the BRE CSEP Guidance Notes.

Benchmark Value Calculation Formula;
£/Tonne CO_2 = Total Solar PV Cost (Exc VAT) x 1000/Solar PV Energy Yield x Displaced Fuel Energy Factor x BRE Assumed Solar PV Life

Solar PV Calculations
The detailed calculation for the solar PV calculation is in Appendix 1.
Solar PV Displacing Grid Electricity = **£708/tonne CO_2**

Table 3. BRE Solar PV Benchmark Values

Displaced Fuel	BRE Solar PV Benchmark Value
Electricity	£990/Tonne CO_2

The solar PV calculations suggest the 4.32 kW solar PV system generating an estimated 3,240 kWh energy yield per year offers acceptable value for money when compared against the BRE benchmark and is recommended.

Wind Turbine Value for Money Evaluation

The wind turbine installation cost is detailed in Appendix 3 and summarised in table 4.

Table 4. Wind Turbine Installation Costs

6.0 kW Grid Connected Turbine	Cost
Total Cost Exc VAT	£26,554.29

Wind Turbine Quotation Appendix 3

To determine whether the wind turbine costs offer value for money compared with grid electricity, the wind turbine energy yield data and costs must be compared against the BRE value for money benchmarks. These are calculated as the cost per tonne of Carbon Dioxide (CO_2) saved as per the benchmarks and calculation methodology in Appendix 4 of the BRE CSEP Guidance Notes.

Benchmark Value Calculation Formula;
£/Tonne CO_2 = Total Wind Turbine Cost (Exc vat) x 1000/Wind Turbine Energy Yield x Displaced Fuel Energy Factor x BRE Assumed Wind Turbine Life

Wind Turbine Calculations
The detailed calculation for the wind turbine calculation is in Appendix 1.
Wind Turbine Displacing Grid Electricity = **£379/tonne CO_2**

Table 5. BRE Wind Turbine Benchmark Values

Displaced Fuel	BRE 6 kW Turbine Benchmark Value
Electricity	£419/Tonne CO_2

The wind turbine calculations suggest the 6.0 kW wind turbine system generating an estimated 8,144 kWh energy yield per year offers acceptable value for money and meets the wind turbine BRE benchmark in table 5.

Renewable Electricity Buy Back Rates

The trustees expressed an interest in selling renewable electricity back to the national grid. Detailed in table 6 are a list of energy suppliers who are currently buying back renewable electricity. Their contact details are in Appendix 6.

Table 6. Electricity Buy Back Rates (April 2009)

	Buy Back Rate/kWh
Good Energy	15 pence/kW
Ecotricity	13 pence/kW
N Power-Juice[6]	10 pence/kW
Green Energy (UK) PLC	10 pence/kW + 4.5p/kW ROCS
Scottish & Southern[7]	20 pence/kW Inc ROCS

Appendix 6

The data in table 6 is current April 2009 data except N Power and Scottish & Southern which are both based on October 2008 data. To comply with the requirements of the energy companies, the village hall trustees must check the terms and conditions of each of the companies. The terms and conditions can be obtained by contacting the companies listed in Appendix 6 of the report. In all cases, the village hall will need to be a customer of the energy company.

Renewable Energy Obligations (ROCS)
Green Energy (UK) Plc will pay 10 pence/kW. They will also pay an additional 4.5 pence/kW for (ROCS), Renewable Obligation Certificates.

The ROCS are obtained by registering with OFGEM. Green Energy will assist the village hall with the ROCs by registering the village hall with OFGEM. The village hall will have to become Green Energy customers.

[6] Oct 2008 Data
[7] Oct 2008 Data

Green Energy will need details of the village hall solar PV/wind turbine installation. If the system is satisfactory, the village hall will become a registered accredited small producer under the scheme. OFGEM will check the amount of electricity exported each year and issue the charity with the ROCS which can then be sold to suppliers such as Green Energy (UK) PLC. OFGEM do not charge for their service. For further information on ROCs contact OFGEM and Green Energy (UK) PLC, see Appendix 6.

The solar PV will generate an income of £421.20 and the wind turbine will generate an income of £1,058.72 based upon a buy back rate of £0.13/unit from Ecotricity. Written confirmation of the buy back rates from the energy suppliers will be required when the trustees begin the process of installing the renewable technologies as the rates and the terms vary. All the buy back income is calculated in Appendix 1. The income is based on the energy supplier buying all the renewable energy. These rates will change but are correct at the time of writing. For detailed information and the terms and conditions applied by the energy companies to buy back rates, the company contact details are in Appendix 6.

The quotations from Solar Energy Alliance exclude an import/export metre but Solar Energy Alliance confirm these are installed for a modest amount and can in some cases be free of charge depending on the chosen village hall energy supplier. The Solar Energy Alliance quote includes a display on the inverter which will be installed in the electrical area of the village hall to enable the trustees to determine the electricity generated by the solar PV/turbine. If an additional wireless display is required, this will cost an estimated £350.000 + VAT and can either be installed during the main installation or it can be installed as a retro fit.

For more information regarding the energy exports, contact Chris Goodings at Solar Energy Alliance on 01502 515532 or the energy companies listed and OFGEM in Appendix 6.

Project Outcomes

Reduction in Carbon Dioxide Emissions

The installation of the wind turbine and solar PV offer significant CO_2 reductions due to the displacement of the fossils fuel they replace. Detailed calculations are in Appendix 1.

Table 7. Solar PV & Wind Turbine Carbon Dioxide Savings

	Annual CO2 Savings
4.32 kWhp Solar PV (Displacing 3,240 kWh)	1,393 kg
6.0 kW Wind Turbine (Displacing 8,144 kWh)	3,502 kg
Total CO2 Savings	**4,895 kg**

Source: Appendix 1

The options of solar PV and a wind turbine will provide significant annual CO2 emissions. See table 7. If the village hall installs cavity wall insulation and both solar PV and the wind turbine, the village hall will reduce their annual grid electricity energy demand from 25,956 kWh to 10,672 kWh of electricity, reducing the annual carbon footprint and electricity costs down to 4,589 kg CO2 and £1,184.59, representing savings of 6,572 kg of CO2 and £1,696.52 per year.

Increased Community Awareness

The village hall trustees will increase the community awareness of the project by utilising the village web site by publicising details of the project and the renewable technologies installed at the village hall on the web site; www.wreningham.org

The trustees will also make the community aware of the project by publicising project details and information in the "Wreningham Mardle" a bi-monthly community news letter circulated to every household outlining the project and the environmental benefits the renewable technologies represent. The trustees will produce press releases for the project to be printed in local new papers informing the local residents of the project details and energy savings and carbon saving benefits of the renewable technologies under consideration. The Parish Council meetings will discuss the project when required and involve local residents. The project details will also be publicised on the village notice boards and in the village hall.

The village hall trustees may plan "open days" at the village hall and "open garden events" around the village to offer the local community the option of visiting the village hall or to meet with the trustees at these local events to enable the local community to discuss the project and to fully understand the details of the proposed renewable technologies under consideration by the trustees.

Reduction in Energy Bills

At the time of writing, the village hall electricity is estimated to be £0.111 per kW averaged between day and night rates based on the E.on "Standard Electricity Plan" available at www.switchwithwhich.co.uk. The energy saving calculations are detailed in Appendix 1.

Table 8. Solar PV & Wind Turbine Energy Savings

	Energy Displaced	**Annual Savings[8]**
Solar PV	3,240 kWh Electricity	£359.64
Wind Turbine	8,144 kWh Electricity	£903.98
Total Savings	**11,384 kWh Electricity**	**£1,263.62**

Source: Appendix 1

The savings in table 7 and table 8 suggest the proposed renewable technologies will produce significant annual energy savings and a subsequent reduction in energy costs for the village hall. Furthermore, the solar PV and wind turbine will potentially generate £1,479.92[9] per annum from exporting to the national grid if both technologies are used.

[8] Based on £0.111/kWh
[9] Based on £0.13/unit buy back rates

Reduction in Reliance on Imported Energy
The data in table 7 and table 8 suggests the total amount of imported national grid electricity saved is 11,384 kWh of electricity and 4,895 kg of carbon dioxide. The wind turbine will save 8,144 kWh of imported electricity and the solar PV will save 3,240 kWh of imported electricity. These options will save the village hall £1,263.62 per annum based on electricity costs of £0.1110/kWh.

Options Appraisal
During site visits, it was established that the village hall could potentially generate renewable electricity on site to off set some of the grid electricity used by the village hall as means to reduce the village hall carbon footprint. The buildings orientation and the site in general is suitable for both solar PV and a wind turbine. The initial renewable electricity options under consideration were a solar 4.32 kWh PV system and a 6.0 kW Wind Turbine. The solar PV system under consideration will meet the BRE benchmark as the solar PV yield is a suitable option due to the un-shaded roof. The wind turbine also meets the BRE turbine benchmark based upon the sites average 5.1 m/s wind speed and subsequent potential energy yield and is therefore suitable for the site.

Overall Project Concept
It is proposed that a solar PV system is roof mounted on the main hall roof with an un shaded East elevation. At the opposite end of the site, in the car park, a 15 metre tall 6 kW wind turbine could be installed. Although the turbine has trees nearby, the turbine will be above the trees and the turbine energy yield will not be affected by the trees. See images 1, 2, and 3.

Image 1.East Facing Solar PV Roof

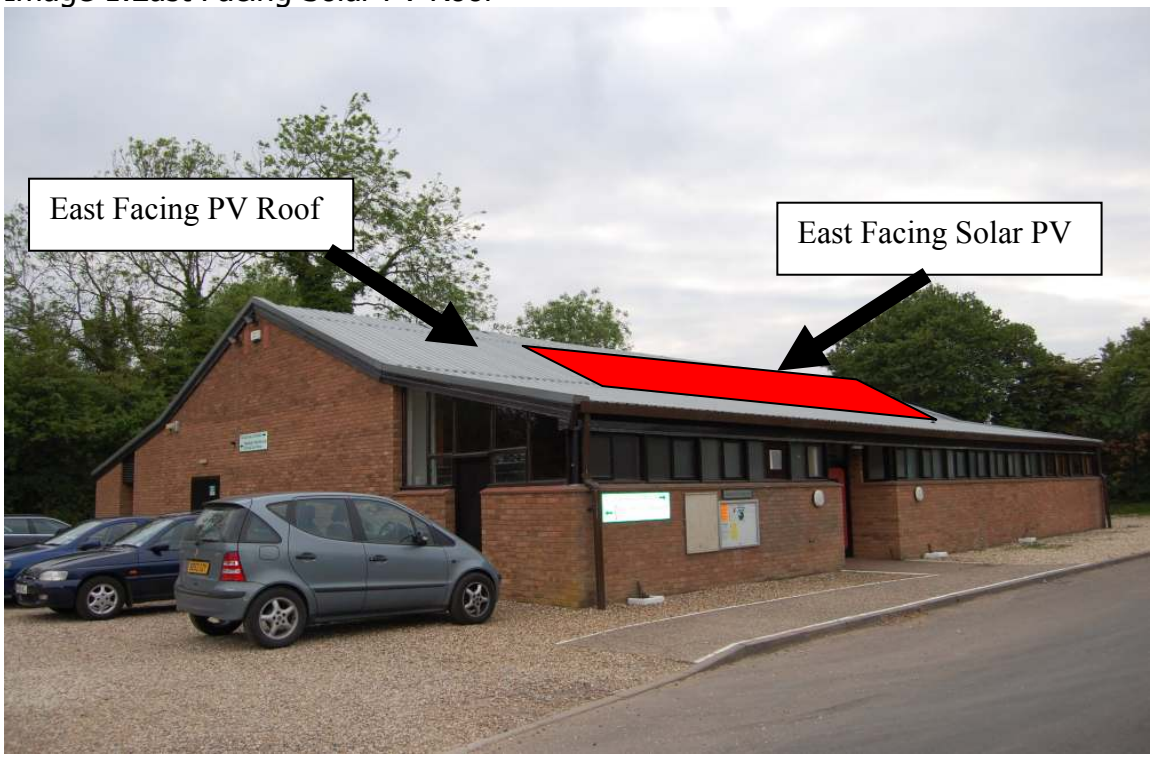

Image 2. Wind Turbine Position

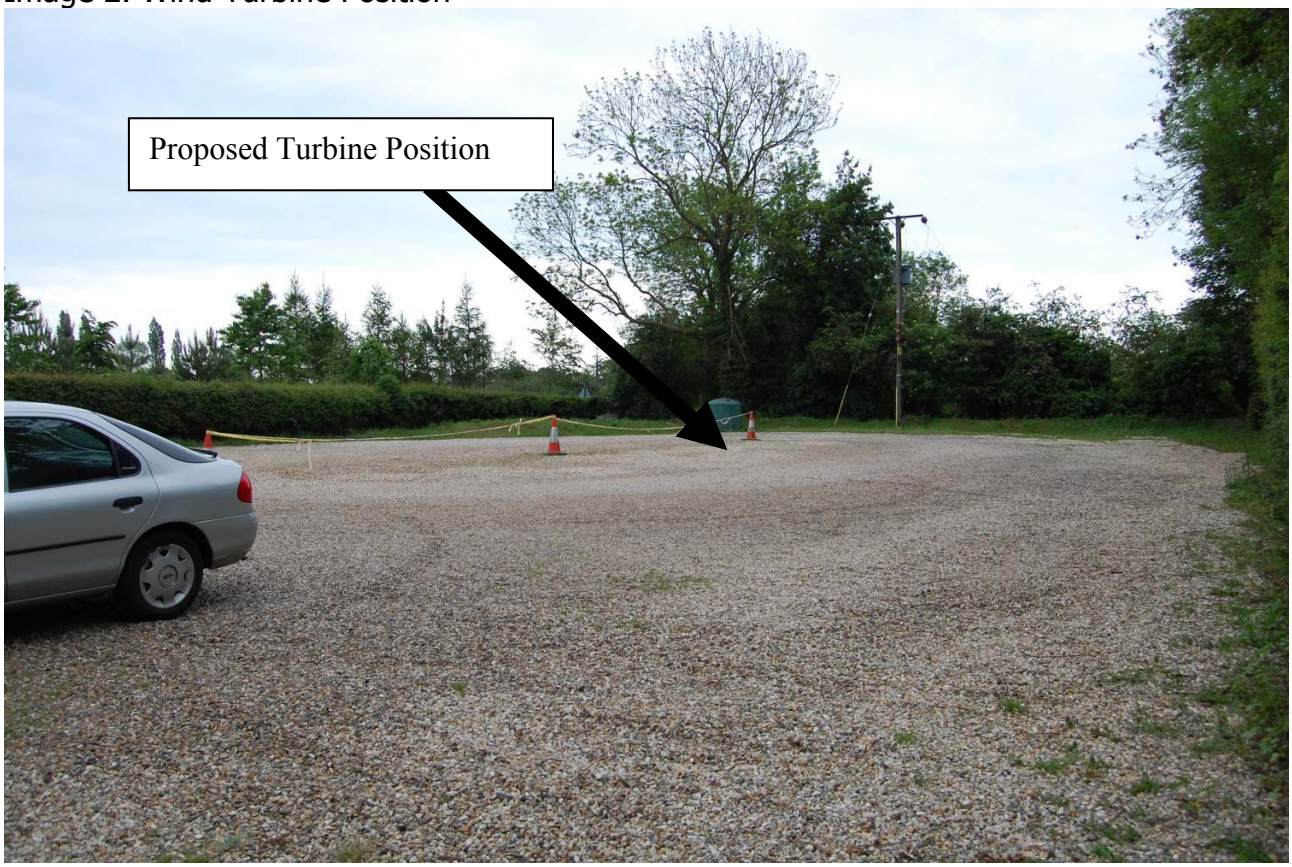

Image 3

The 4.32 kW solar PV and 6.0kW wind turbine renewable electricity option, both meet the BRE benchmark and are therefore considered suitable due to the proposed East orientation of the solar PV roof and the height of the turbine above the village hall car park trees. The project costs per tonne of carbon saved for the renewable technologies under consideration are detailed in table 9.

Table 9. Project Cost/Tonne Carbon Dioxide (CO_2)

CSEP Benchmark	**Proposed Solar PV**	**Proposed Wind Turbine**
Solar PV Displacing Electricity £990/tonne CO_2	£708/tonne CO_2	
Wind Turbine Displacing Electricity £419/tonne CO_2		£379/tonne CO_2

It is proposed by the trustees that the wind turbine and solar PV installations will commence between Autumn 2009 and Spring 2010 to enable the installation of the renewable technologies to be completed by the summer of 2010. These dates will ensure the project installations are completed within twelve months of the capital grant offer from BRE CSEP.

When the installations are completed, the trustees will notify the local residents of the works and the potential energy and carbon savings benefits. This will be achieved by publicising the project on the village parish council web site, the village newsletter and via local press releases and village notice boards.

Project Management

It is proposed by the trustees that the renewable technology installations will be ordered when the CSEP grant funds become available. Thus it is proposed that the renewable technologies installations will commence during the autumn/winter of 2009 and be completed by the spring of 2010. The solar PV system and the wind turbine will be ordered 4-8 weeks prior to the installation date. These dates ensure the project installations are all completed with twelve months of the capital grant offer from BRE CSEP and are allow for the suppliers delivery and installation lead times.

Community Involvement

The trustees are considering the possibility of having an "open day" in the village hall to discuss the village hall project in detail to ensure the community fully understand the renewable technologies under consideration by the trustees and to understand the environmental benefits of insulating the hall and reducing the village halls carbon footprint by using renewable electricity supplied by solar PV and the wind turbine. The trustees are also considering the possibility of discussing the project with the local community at "open garden" events to be held in the village during 2009.

In a recent issue of the "Wreningham Mardle" news magazine issued to every household in the village, the magazine provided information on the village halls need to consider the use of a feasibility study to be undertaken to reduce the village hall energy usage and carbon emissions by installing renewable energy technologies. No one from the community raised any objections. It is now intended by the trustees to publish a summary the findings of the CSEP development study in the "Wreningham Wardle" and to consider arranging an evening presentation at the village hall to discuss the reports findings with the community.

As a result of the community consultation process to date, the village hall trustees have proceeded to consider the energy efficiency and low carbon energy options that can be installed to reduce the village halls carbon footprint and energy demand.

Establishing Need

The village hall is used on a daily basis by many individuals and user groups from the local community for many activities. Regular activities include;

- Children's parties
- Birthday parties
- Wedding receptions
- Short mat bowls
- Dance practice classes
- WI meetings
- Village school end of year concert
- Village school Harvest Festival
- Village School two christmas concerts
- The flower club
- Mother and toddler weekly meetings
- Art exhibitions
- Parish Council & church meetings
- Jumble sales
- Norfolk Caledonian Society functions
- Regular monthly music concerts
- Yoga classes
- Village pantomime show & rehersals
- Youth club meetings
- Village social club

The village hall provides education services, entertainment and social services to people of all ages ranging from children to teenagers from the village primary school and the youth club, to adults and the elderly from all social backgrounds in the local community and beyond. The village hall is able to be self supportive and as a charity must remain financially solvent. In recent years, despite the village hall becoming ever popular with the local community, the village halls increasing energy costs are becoming a problem and in the future the buildings energy consumption costs could potentially jeopardise the existence of the village hall unless steps are taken to reduce the buildings energy costs.

At a time when the village hall enables local residents to benefit from utilising the extensive range of local services and activities and reduces the subsequent car mileage and carbon emissions of residents, by providing local services, it is important the village hall continues to provide these important services in the future.

Therefore, local concerns regarding the threat of climate change and rising energy costs have prompted the trustees to consider the energy reducing and energy efficiency options that are now available to reduce the village halls carbon emissions and energy costs, to enable the village hall to continue to provide a service to the local community for future generations.

The proposal to install renewable technologies in the village hall to displace fossil fuel usage and to reduce the village halls carbon footprint is seen by the village hall trustees as essential in minimising the environmental impact of the village hall and sets an example to the local community and to those groups and individuals currently using the village hall. The village hall trustees fully intend to minimise the buildings environmental impact at all levels to reduce the threat of climate change and to reduce the buildings energy costs. The village hall trustees believe that the village hall must lead by example.

All the local user groups and individuals using the village hall will be influenced by the project as the trustees publicise the carbon savings and energy savings benefits associated with the wind turbine and the solar PV installation.

Public Profile and Promotion

The village hall trustees intend to publicise the projects renewable energy installation details and the projects carbon and energy saving benefits associated with the project in the "Mardle" news letter, on the village web site, on village notice boards in the village hall and around the village, via local press releases, on the solar PV/turbine inverter display in the electrical area in the village hall and at public meetings to be held at the village hall and possibly at "open garden" events. All the details of the parties involved in the project from those providing the funding to the projects designers and the installers will all be publicised by the village hall trustees.

The village news letter and the village web site will be updated as the work commences and will explain to the local community and beyond, the environmental reasoning behind the project, the carbon benefits to the community and details of the carbon and energy cost savings and benefits of the installation of the renewable technologies.

All the individuals and groups utilising the building will be influenced by the project as the trustees publicise the carbon savings and energy savings benefits associated with the renewable technology installations. The solar PV/wind turbine system will have a display on the inverter installed in the electrical area next to the stage. The display will indicate the amount of renewable electricity being generated and carbon savings incurred by the solar PV/turbine system.

Project Longevity

The total cost of the village hall project including the renewable technologies installations is estimated to be around £51,224 + VAT based on the quotations from the CSEP approved technology contractors.

External grant funding is also being sought from the Low Carbon Building Programme (LCBP) in addition to the CSEP funding for the installation of the renewable technologies under consideration. It is hoped that the CSEP will fund 50% of the costs of the renewable technologies and some of the cavity wall insulation costs. The remaining 50% renewable energy capital costs are hoped to be funded by the LCBP.

Energy Efficiency

The trustees are considering insulating the external cavity walls of the village hall. Once completed, the insulated cavity walls will ensure the insulated walls improve the thermal performance of the village hall building with the objective of reducing space heating demand.

In addition to the improved level of thermal performance of the village hall, it is recommended that the trustees replace the existing electrical appliances with energy A rated appliances and the lighting is all changed to low energy lighting as a means to further reduce the village halls electrical energy demand and improve the buildings electrical energy efficiency.

The improved thermal performance of the insulated village hall will maximise the buildings heating efficiency by reducing the buildings electrical energy heating demand and subsequent energy carbon emissions. If the trustees replace the older electrical appliances and lighting with energy efficient appliances and lighting, this strategy will further reduce the village halls energy demand, carbon emissions and operating costs.

The solar PV system will save the village hall 3,240 kWh of grid electricity saving 1,393 kg CO2 and £359.64 per year, the wind turbine will save the village hall 8,144 kWh of grid electricity saving 3,502 kg CO2 and £903.98 per year and the cavity wall insulation will save 3,900 kWh of grid electricity saving 1,677 kg CO2 and £432.90 per year.
See table 10.

Table 10. The Village Hall Energy Efficiency Benefits

	Energy Displaced	**Annual Savings[10]**
Solar PV	3,240 kWh Electricity	£359.64
Wind Turbine	8,144 kWh Electricity	£903.98
Cavity Wall Insulation[11]	3,900 kWh Electricity	£432.90
Total Savings	**15,284 kWh Electricity**	**£1,696.52**

[10] Based on £0.1110/kWh
[11] Based on a 20% reduction in space heating. See Appendix 1 calculations

Energy Performance

The conventional fossil fuel space heating option common to rural village halls is to use fossil fuels such as electric heating as currently used by Wreningham Village Hall to provide space heating , hot water, lighting and catering. The annual energy demand to provide the space heating, hot water, lighting and catering in the village hall is detailed in table 11 and compared against the recommended renewable technology and energy efficiency improvements.

Table 11. Space Heating Energy Cost, CO_2 & Usage Comparison

	Energy Consumed	**Unit Cost**	**Annual Costs**	**CO_2 Emissions**
Existing Electric Heating System	25,956 kWh	£0.1110/kWh	£2,881.11	11,161 kg CO_2
Solar PV/Turbine & Cavity Wall Works	10,672 kWh	£0.1110/kWh	£1,184.59	4,589 kg CO_2
Annual Savings	**15,284 kWh**		**£1,696.52**	**6,572 kg CO_2**

The savings indicated in table 11 suggest the renewable technologies will produce significant annual carbon savings and energy savings.

Sustainability

The current project of reducing the village halls carbon footprint is seen by the trustees as essential in minimising the buildings environmental impact and sets an example to the local community and all those individuals and organisations using the village hall, that the trustees of the village hall intend to minimise the village halls environmental impact to reduce the threat of climate change and to reduce the energy costs associated with the building.

The village hall is of significant importance to the local community with many user groups and individuals frequently using the village hall. Therefore, the long term sustainability of the village hall is vital to the local community. If the village hall were to become financially un-sustainable and be forced to close due to high energy costs, those using the village hall would need to drive out of the village, resulting in the additional car mileage CO_2 emissions and fossil fuel consumption.

The proposed use of renewable technologies to reduce the buildings carbon emissions and grid supplied energy will improve the sustainability of the village hall and will displace national grid electricity. The proposed cavity wall insulation and the subsequent improved thermal performance and carbon emission savings of all the recommended technologies will increase the overall energy efficiency of the building, maintaining the sustainability of the building from an energy perspective and will assist the village hall in providing essential services to the local community and local organisations by minimising the village halls energy costs.

Additional sustainability considerations by the trustees include the proposal by the village hall trustees that the village hall should encourage the use of cycling as a means to assist user groups to reduce the use of their cars to reduce car CO_2 emissions. The trustees are therefore considering the possibility of the installation of an enclosed bicycle rack for those individuals using the village hall facilities.

It has been proposed by the trustees that where possible, the construction materials for any future building refurbishment works should be sourced from more sustainable sources. For example, the long term replacement of the buildings double glazing should therefore be specified either as recycled upvc if upvc is used or the replacement windows should be FSC sourced hardwood frames. If timber is required for future refurbishment works, where possible the timber should be FSC sourced.

Building Integration

Image 4 indicates the position of the proposed Solar PV/Turbine cables and the electrical area of the hall.

Image 4

The red and yellow arrows suggest possible routes for the wind turbine cable to enter the buildings electrical area.

Image 5

Image 5 indicates the turbine cable route options from the turbine mast to the far end of the village halls electrical area indicated in Image 4.

Image 6 and Image 7 indicate the location of the village halls electrical area inside the village hall next to the stage.

Image 6.

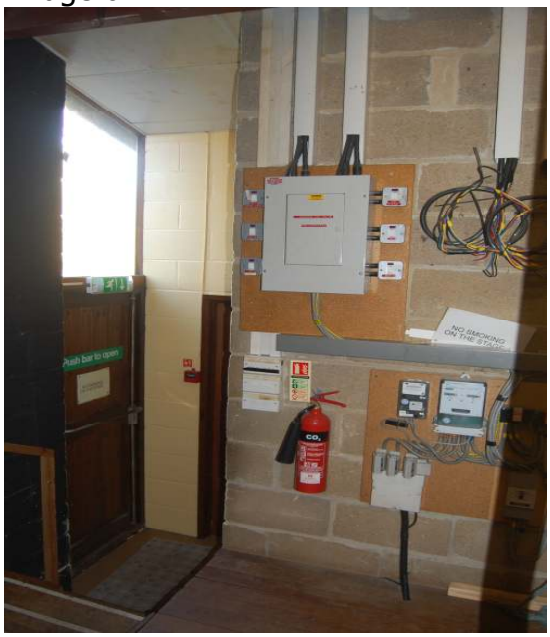

Image 7.

The suggested location of the renewable technologies and their cable routes are not an accurate representation of the proposed installation. These suggestions are for guidance purposes only.

The integration of the proposed solar PV and wind turbine, coupled with the proposed insulation levels in the village hall external cavity walls will optimise the renewable technology performance and minimise the buildings heating demand and subsequent carbon emissions and energy costs.

The East facing main roof of the village hall will enable the roof mounted solar PV system to perform to generate around 3,240 kWh of renewable electricity per year and the suggested location for the wind turbine will generate around 8,144 kWh of electricity to reduce the buildings grid electricity demand.

Structural Design

The 4.32kW Solar PV System

The solar PV system will comprise of 24 Sharp NU 180-E1 solar PV panels fixed to the village halls main roof. See figure 1.

The solar PV panels will cover an area of around 32m² of roof. This system will generate 3,240 kWh of electricity per annum.

The solar PV cable runs from the roof mounted solar panels into the loft space and terminates in the electrical fuse box and distribution centre in the electrical area indicated in Images 6 and 7.

Figure 1. The Sharpe NU 180 E1 Solar Panels

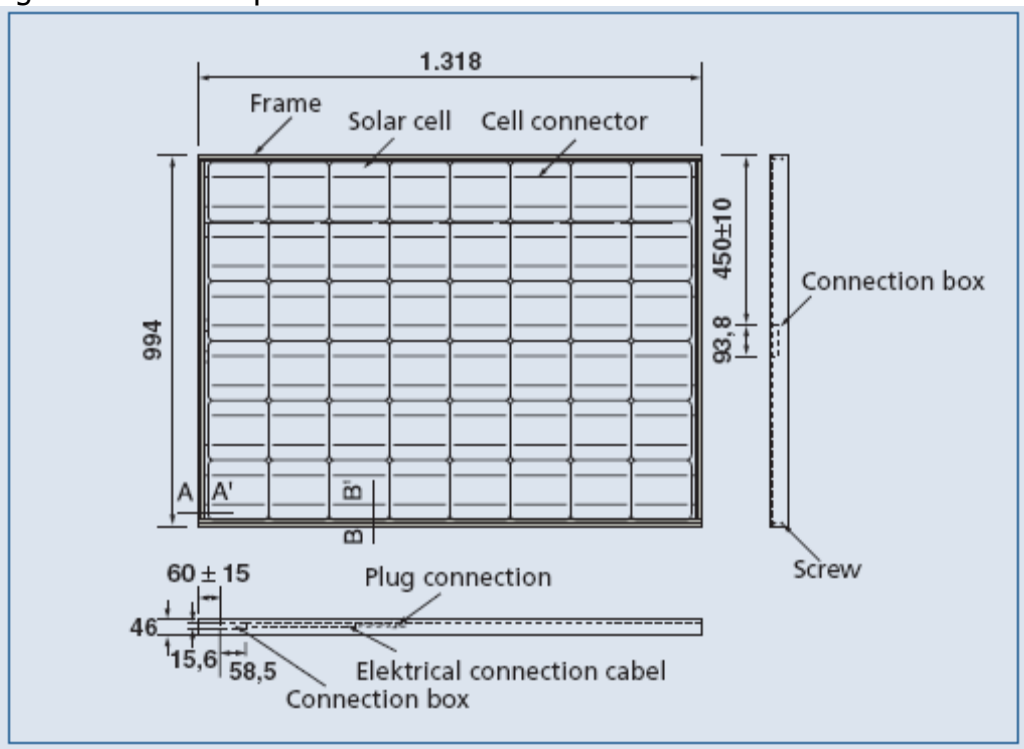

Figure 2. Cross Sectional View of the Sharpe Solar Panel

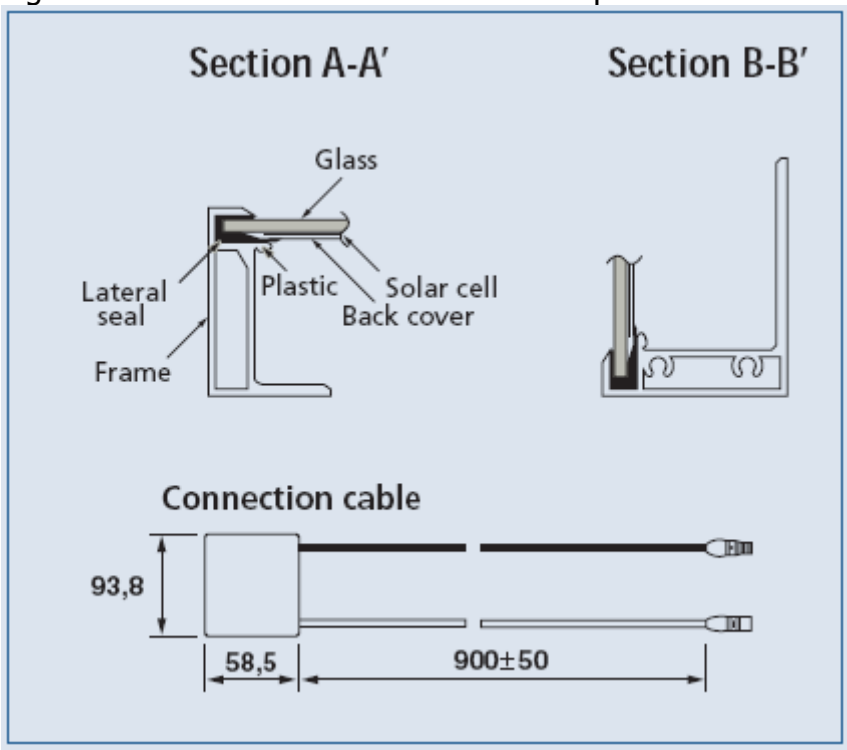

Each panel weighs 16 kg and Solar Energy Alliance suggest the total solar PV system will weigh 672 kg allowing for the panels and roof mounting frame.

The Proven 6/300 6.0 kW Wind Turbine
The wind turbine will have a mast height of 15 metres and a blade diameter of 5.5 metres.

Image 8. The 6 kW Proven Wind Turbine

Source: Proven Wind Turbines

The wind generator is positioned on a 15 metre high free standing mast. The foundations to support the turbine structure are a 10m³ strong mix concrete pad approximately 3m x 3m x 1.2m. The concrete specification is 35 Newton load strength.

The turbine is connected to the village hall via the main power cable. The cable will run from the turbine along the edge of the site, see image 5. The cable will run around the length of the village hall building along either the East or West elevation and terminate in the electrical area next to the stage. The cable will be buried in a trench.

Electrical schematics

The solar PV and wind turbine schematic drawings are located in Appendix 4.

Project team

The project team comprise of the renewable technology company Solar Energy Alliance Ltd,who are listed on the BRE Microgeneration Certification Scheme and are approved by the CSEP and LCBP grant programme to design, supply and install the renewable technologies proposed for the project.

Sharpe 4.32kW Solar PV & Proven 6.0kW Wind Turbine System
Solar Energy Alliance Ltd
8 Battery Green Road
Lowestoft
Suffolk NR32 1DE
Tel: 01502 515532
Contact: Mr. Chris Goddings & Chris Millyard

Solar Energy Alliance has installed wind turbines and solar PV systems at locations around the UK. Since 2007 Solar Energy Alliance have installed an estimated 10-15 wind turbines and 5-10 solar pv systems. Under the Phase 2 Low Carbon Buildings Programme grant scheme, Solar Energy Alliance have recently installed a 15kW turbine at Aylsham Police Station and they have installed a Proven WT6000 turbine at Leventhorpe School at Sawbridgeworth, Hertfordshire and Astley School at Hemel Hempstead. The Solar Energy Alliance Ltd Environmental Policy is detailed in Appendix 5.

Legal Issues

The trustees confirm "The Wreningham Village Hall" charity is the legal owner of the village hall building. The site at Wreningham is rented for a "pepper corn rent" from the village parish council. The trustees confirm there is no outstanding mortgage on the property. The trustees also confirm that they are not in breach of any local planning regulations.

Uncertainties

The trustees confirm that to their Knowledge, there are no outstanding statutory approvals, funding, management or resource issues that may affect the progress of the project. The area is not a conservation area and the trustees confirm that to proceed with the turbine installation, the charity will need to obtain planning consent from the local planning authority.

Report Conclusions

The thermal performance of the village hall as a result of the proposed cavity wall insulation works will result in reducing the space heating demand of the building, increasing the overall energy efficiency of the village hall and reducing the buildings carbon footprint.

The report considered the performance of a 6.0 kW wind turbine. The report demonstrates the turbine would generate a significant amount of renewable electricity based upon the sites average annual wind speed and the turbine costs and energy yield meet the requirements of the wind turbine BRE benchmark and is therefore recommended. The report also demonstrates the wind turbine would provide the charity with a significant annual income stream.

The installation of the Sharp 4.32kW solar PV system is recommended as this option meets the BRE benchmark requirements and will greatly assist to reduce the village halls carbon footprint, off setting some of the electrical consumption of the building. This option will also generate an income stream for the village hall.

The trustees can either install solar PV or a wind turbine or the trustees can install both technologies. It is recommended, that both technologies are considered as the combined carbon savings, energy savings and cost savings created by the combined technologies will be significant and results in the village hall generating over half of the buildings total annual energy demand, assuming the cavity wall insulation is installed, further reducing the village halls carbon footprint.

The cavity wall insulation will reduce the village halls heating demand by 20% saving an estimated 3,900 kWh of energy. The investment in cavity wall insulation will maximise the charities energy savings and carbon emissions and is strongly recommended.

If the wind turbine and solar PV are installed in the village hall, the village hall will have a reduced environmental impact and reduced energy costs that will ensure the long term success of the village hall for the local community. This in turn will demonstrate to all the individuals and user groups using the village hall, the real energy and carbon saving benefits of the wind turbine and the solar PV system.

Appendix 1
Project Energy & CO_2 Emissions Calculations

Current Village Hall Energy Consumption & Carbon Footprint

Current Annual Village Hall Energy Usage

	Energy Consumed (kWh)	Carbon Emissions kg CO_2/yr	Current Annual Costs[12]
March 2005 – April 2006 Metre No:L70E018580-01 Metre Reading: 464,823 – 471,436	6,613[13]	2,844	£734.04
March 2005 – April 2006 Metre No:L70E018580-02 Metre Reading: 564,147 – 583,490[14]	19,343[15]	8,317	£2,147.07
Total	**25,956 kWh/Year**	**11,161 kg CO_2/yr**	**£2,881.11**

Source: E.on V/H Invoices 101654967 & 102592128

CO2 Calculations:
kWh x Electric Fuel Emission Factor (0.43kgCO2/kW) = CO2 (kg)

6,613 kWh x 0.43 = 2,844 kg CO2
19,343 kWh x 0.43 = 8,317 kg CO2

Cavity Wall Insulation Benefits
Cavity wall insulation will save an estimated 20% of space heating energy demand and carbon emissions.

Based on total annual energy demand of 26,000 kWh & assuming space heating consumes 75% of the total energy demand;

Total space heating demand = 19,500 kWh
Assuming 20% savings, cavity wall insulation will save 3,900 kWh, 1,677 kg CO2 based upon electricity emission factor of 0.43 kg CO2/kW and £432.90 per year based on £0.111/kWh.

Benchmark Value Calculation Formula Solar PV;
£/Tonne CO_2 = Total Solar PV Cost x 1000/Solar PV Energy Yield x Displaced Fuel Energy Factor x BRE Assumed Technology Life

[12] Based on Electricity @ £0.1110 (E.on Standard Electricity Plan. 14th April 2009)
[13] E.on Invoice Data
[14] Allows for usage credit (Invoice No: 102592128 Dated 01.07.2006)
[15] E.on Invoice Data

Benchmark Value Calculation Formula Wind Turbine;
£/Tonne CO_2 = Total Wind Turbine Cost x 1000/Wind Turbine Energy Yield x Displaced Fuel Energy Factor x BRE Assumed Technology Life

4.32 kW Solar PV Calculations
Solar PV Displacing Grid Electricity
(24,670 x 1000) ÷ (3,240 x 0.43 x 25) = £708/tonne CO_2

6.0 kW Wind Turbine Calculations
6.0 kW Turbine Displacing Grid Electricity
(26,554.29 x 1000) ÷ (8,144 x 0.43 x 20) = £379/tonne CO_2

4.32 kW Solar PV CO_2 Emissions & Savings
Solar PV CO2 Savings Assuming Annual Energy Yield of 3,240 kWh
3,240 x 0.43 = 1,393 kg CO_2/year
Electricity Displaced by the Solar PV
3,240 kWh Electricity
3,240 kWh x £0.1110 = £359.64 savings per annum

6.0 kW Wind Turbine CO_2 Emissions & Savings . Energy Yield of 8,144 kWh
8,144 x 0.43 = 3,502 kg CO_2/year
Electricity Displaced by the turbine
8,144 kWh Electricity
8,144 kWh x £0.1110 = £903.98 savings per annum

Solar PV Income
3,240 kWh of electricity will generate the following income

Electricity Buy Back Rates (April 2009)

	Buy Back Rate/kWh	**Solar PV Income**	**Turbine Income**
Good Energy	15 pence/kW	£486.00	£1,221.60
Ecotricity	13 pence/kW	£421.20	£1,058.72
N Power-Juice	10 pence/kW	£324.00	£814.00
Green Energy (UK) PLC	10 pence/kW + 4.5p/kW ROCS	£469.80	£1,180.88
Scottish & Southern	20 pence/kW Inc ROCS	£648.00	£1,628.80

Appendix 2
The Solar PV Quotation

SOLAR ENERGY ALLIANCE
responsible energy

Solar Photovoltaic System Quote

Quote Reference: ASOC-SEA-NR161AN

Framework Supplier: Solarcentury

Accredited Installer: Solar Energy Alliance Ltd

Accreditation Number: MCS1079

8th January 2009

Ms Jill Maidment
Wrenningham Village Hall
Mill Lane
Wrenningham
Norwich
NR16 1AN

Dear Ms Maidment,

I am pleased to enclose our quotation for the installation of a Solar PV system at: the above address

4320Wp Solar PV Array.

System Summery	System Output	System Nature
24 x high efficiency monocrystaline solar PV panels Manufacturer: Sharp Model: NU-180E1 LCBP2 ref No: PMC0495 1 x inverter: IG40 Manufacturer: Fronius LCBP2 ref No: PIG0005	4.32kWp	Pitched Roof
This system will generate circa 3,240 kWh of electricity and save over 1,477 kg of CO2 per year		

Quotation	
Description	Price (£)
Modules	£15,400.00
Inverters	£2,055.00
Installation: roof integrations, mounting frames, electrical connection	£980.00
Other: Structural engineers sign off fee	£600.00
Other installation materials: AC & CD isolators, meter, junction box etc.	£2,035.00
Other: roof access equipment	£600.00
Other: installation labour & equipment design	£3,000 .00
Net	£24,670.00
VAT @ 5%	£1,203.50
Total	£25,903.50

Solar Energy Alliance 8, Battery Green Road, Lowestoft, Suffolk, NR32 1DE **Company No.** 06391061
Telephone: +44(0)1502 515532 **Email:** info@solarenergyalliance.com **Website:** www.solarenergyalliance.com
VAT No. 711 6535 56 MCS 1079

SOLAR ENERGY ALLIANCE
responsible energy

Price and Payment

The price to install your selected solar PV system will be £24,670.00 (excluding VAT) and will include:

- Delivery
- Photovoltaic modules
- Mounting system
- All wiring and connections
- Inverter
- Access equipment
- Full installation
- Commissioning – connecting the system to the mains
- Generation kWh meter
- Notification to the network operator
- Owner's manual
- Warranties

Payment schedule
This price is based on the following payment terms:

- 10% staged payment for design & preparation. Invoice issued on order placement.
- 50% staged payment due 10 working days before site attendance of men and materials.
- 40% staged payment on completion of installation - due 14 days from receipt of invoice.

Government Funding

You can apply for a grant of up to 50% of the direct installation costs under Phase 2 of the Low Carbon Buildings Programme. To obtain a Phase 2 grant you need to have a contract with one of the appointed 'framework suppliers'. We are a registered installer with one of the framework suppliers, Solarcentury, and for grant purposes you must contract with them. However, we have an arrangement with Solarcentury and the BRE, the administrators of the grant, that for all practical purposes you will deal with us directly. We will install the project, your payments will be direct to us and we will provide the warranty on the system.

The grant application can be done on-line at: http://www.lowcarbonbuildingsphase2.org.uk/

When making the application 'Solarcentury' must be ticked as the framework supplier in Section B7 and the framework supplier reference entered as "ASOC-SEA-NR161AN"

If you have any questions about the grant application please do not hesitate to contact us.

Once you have received a grant offer we will arrange the contracts with Solarcentury.

Mains Power Failure

If there is a power cut or the mains power is switched off deliberately the solar electric system will automatically disconnect from the main supply. This means that an engineer working on the electrical system will be in no danger. When the power is switched back on the system will automatically reconnect.

Planning Consent

It is a requirement to contact your local planning authority and advise them of your intention to install a solar electric system. In many cases the installation will be considered a Permitted Development, however Planning Permission may be required.

Solar Energy Alliance 8, Battery Green Road, Lowestoft, Suffolk, NR32 1DE **Company No.** 06391061
Telephone: +44(0)1502 515532 **Email:** info@solarenergyalliance.com **Website:** www.solarenergyalliance.com
VAT No. 711 6535 56 MCS 1079

SOLAR ENERGY ALLIANCE
responsible energy

Insurance

Our advice with reference to your building insurance is that you do need to inform your Insurers of the installation. The addition of a solar PV system should be viewed as a 'material fact' and policy holders have a duty to inform insurance companies. We have made enquiries with some of the large insurers as to whether this addition will change your premium, and their view is that the only way solar PV will increase the premium on a buildings insurance policy is if it is proven that it increases either the value of the property or its rebuild cost. Therefore it will be down to the insurance company as to how they view this.

The Property

We have assessed the architects plans to confirm orientation and shading and have assessed this project as being suitable for a solar PV installation. Each panel and associated mounting unit will weigh approximately 28kg, therefore the total load on the roof will be 672kg. I recommend that you get confirmation from an appropriate professional that the structure of the building is suitable for the proposed installation.

Installation

We will install a high efficiency solar PV system on the pitched roof of building as directed. We have been advised that there will be access to this roof area – via a scaffold tower that we will provide. The inverter will be mounted in the electrics room and we will require the availability of one 20mm conduit running from the roof area to where the inverter are to be housed, complete with cable pull wires inserted. The inverter will connect into single phase of building, and will require a spare MCB slot for us to connect into. This quote is on the basis that the connection point will be in the same room as the inverter is housed. The solar PV system will be grid connected and we will complete all the paperwork and grid connection arrangements on your behalf. However, you would need to arrange the actual supply of electricity to the property as this is a contract between you and your supplier.

Warranties

Your solar PV system will have the following warranties:

- 20 year solar PV module warranty
- 5 year inverter warranty
- 2 year installation warranty

This offer is open for 30 days. If the information in this offer letter is acceptable then please proceed with the grant application. If you have any questions please do not hesitate to contact us.

Yours sincerely,

Chris Goodings
MD

Solar Energy Alliance 8, Battery Green Road, Lowestoft, Suffolk, NR32 1DE **Company No.** 06391061
Telephone: +44(0)1502 515532 **Email:** info@solarenergyalliance.com **Website:** www.solarenergyalliance.com
VAT No. 711 6535 56 MCS 1079

Sharpe Solar PV Specification

SHARP

NU series
185 W | 180 W
175 W | 170 W
Monocrystalline silicon photovoltaic modules

say yes to solar power!
Because it protects the climate.

Innovation from the photovoltaic pioneer

Sharp, as a solar specialist with 50 years of experience in photovoltaics (PV), makes an essential contribution towards groundbreaking advancements in solar technology.

The NU Sharp series of photovoltaic modules are designed for applications with a high power requirement. These monocrystalline quality modules produce a sustained, reliable yield even under demanding deployment conditions.

All Sharp NU series modules offer optimal system integration – both technically and economically – and are suitable for installation in grid-coupled systems.

Brief information for the installer

- 155.55 mm x 155.55 mm monocrystalline solar cell
- 48 cells in series
- 2,400 N/m² mechanical load-bearing capacity (245 kg/m²)
- 1,000V DC maximum system voltage
- CE tested for your safety

Product features

- High performance photovoltaic modules made of monocrystalline (155.55 mm²) silicon solar cells with module efficiency of up to 14.1 %.
- Bypass diodes to minimise power loss with shading.
- Textured cell surface for especially high current yields.
- BSF structure (Black Surface Field) for optimising cell efficiency.
- Use of annealed glass, EVA plastic and weather-protection foil, as well as an anodised aluminium frame with water drainage holes for prolonged use.
- Output: connection cable with water-protected plug connector.

Quality from Sharp

Sharp Solar quality sets standards. Permanent monitoring guarantees consistent high quality. Each module is optically, mechanically and electrically tested. You recognise it from the Original Sharp label, the serial number and the Sharp guarantee:

- 2 year product guarantee
- 10 year performance guarantee for a 90 % power output
- min. 20 year performance guarantee for a 80 % power output

The detailed guarantee conditions and further information is available at **www.sharp-world.com**.

Mechanical data

Cell	Monocrystalline (155.55 mm)² Sharp silicon solar cells
Number and connection of cells	48 in series
Dimensions	1.318 x 994 x 46 mm (1.31 m²)
Weight	16 kg
Connection type	Cable with plug connector (MC-3)

Limit values

Storage humidity	up to 90	%
Operating temperature (cell)	−40 to +90	°C
Storage temperature	−40 to +90	°C
Maximum system voltage	1,000	V DC
Maximum mechanical load	2,400	N/m²

Electrical data

Module production in the EU Module production in Japan		NU-185 (E1) NU-S5 (E3E)	NU-180 (E1) NU-S0 (E3E)	NU-S0 (E3Z)	NU-R5 (E3Z)	NU-R0 (E3E)	
Rated power		185 W_p	180 W_p	180 W_p	175 W_p	170 W_p	
Open circuit voltage	V_{oc}	30.2	30.0	30.0	29.8	29.4	V
Short circuit current	I_{sc}	8.54	8.37	8.23	8.29	8.37	A
Voltage at maximum power	V_{pm}	24.0	23.7	23.7	23.2	22.4	V
Current at maximum power	I_{pm}	7.71	7.6	7.6	7.55	7.60	A
Module efficiency	η_m	14.1	13.7	13.7	13.4	13.0	%
Temperature coefficient - open circuit voltage	αV_{oc}	-104	-104	-104	-104	-104	mV / °C
Temperature coefficient - short circuit current	αI_{sc}	+0.053	+0.053	+0.053	+0.053	+0.053	% / °C
Temperature coefficient – power	αP_m	-0.485	-0.485	-0.485	-0.485	-0.485	% / °C

The electrical data apply under standard testing conditions (STC): Incident radiation 1.000 W/m² mit Lichtspektrum AM 1.5 with AM 1.5 light spectrum at a cell temperature of 25 °C. The power output is subject to a manufacturing tolerance of – 5 % and + 10 %. The modules manufactured in Europe and Japan are identical.

Characteristic curves

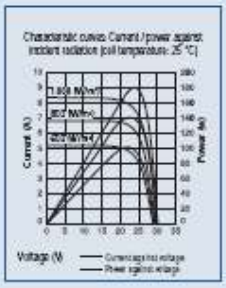

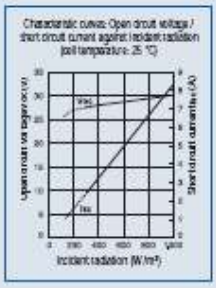

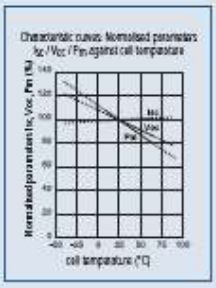

Applications

- Grid-coupled PV systems
- Grid-independent systems
- On-roof PV systems (roof parallel)
- On-roof PV systems (on stilts)
- Open air PV systems

Please read our extensive installation guide carefully prior to installing the photovoltaic modules.

External dimensions

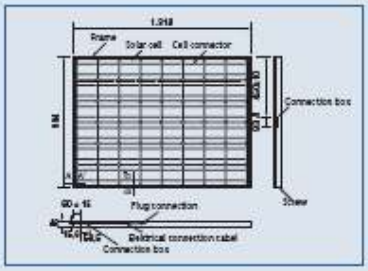

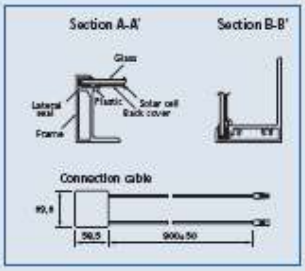

Note

Modifications to technical data are possible without prior notice. Please request the current datasheets from Sharp before using Sharp products. Sharp assumes no responsibility for damage caused to equipment fitted with Sharp products based on unverified information.

The specifications may deviate slightly and are not guaranteed. Installation and operating instructions are to be obtained from the relevant manuals or can be downloaded from **www.sharp-world.com.**

This module should not be connected directly to a load.

The reference figure on the front page shows a 12.6 kWp system of Ormer Solartechnik in Solingen.

SHARP

Central & Eastern Europe
Tel: +43-(0)1-72 71 90 · Fax: +43-(0)1-72 71 91 41
www.sharp-oee.com

France
Tel: +33-(0)1-49 90 34 00 · Fax: +33-(0)1-48 63 26 21
www.sharp.fr

Germany & Austria
Tel. Germany: +49-(0)18 05-01 52 22 (0,12 €/min.)
Tel. Austria: +49-(0)8 20-40 06 40 (0,145 €/min.)
www.sharp.de/solar | www.sharp.at/solar

Italy
Tel: +39-02-89 59 51 · Fax: +39-02-89 53 08 95
www.sharp.it

Spain & Portugal
Tel: +34-(0)93-5 81 97 00 · Fax: +34-(0)93-6 75 46 11
www.sharp.es

Nordic Countries
Tel: +46-(0)8-6 34 36 00 · Fax: +46-(0)8-6 34 36 10
www.sharp.se

Switzerland
Tel: +41-(0)1-8 46 61 11 · Fax: +41-(0)1-8 46 62 25
www.sharp.ch

Benelux
Tel: +31-(0)30-6 35 95 00 · Fax: +31-(0)30-6 35 95 95
www.sharp.nl | www.sharp.be

United Kingdom
4 Furzeground Way | Stockley Park | Uxbridge | Middlesex | UB11 1EZ
Tel: +44-(0)1 61-2 05 23 33 · Fax: +44-(0)1 61-2 05 70 76
www.sharp.co.uk/solar

SolarNl/Sanz_D0007

Appendix 3
The 6.0 kW Wind Turbine Quotation

SOLAR ENERGY ALLIANCE
responsible energy

Ms Jill Maidment
Wrenningham Village Hall
Mill Lane
Norwich
NR16 1AN

Wind Turbine : Quote

Quote Reference : Not yet Allocated

Frame Work Supplier : Low Carbon Partnership

Accredited Installer : Solar Energy Alliance Ltd

Accreditation Number : MCS 1079

25th February 2009

Dear Ms Jill Maidment

I am pleased to enclose our quotation for the installation of a wind turbine system at: the above address.

System Summary	System Output	System Type
6kW Proven Energy, Grid Connected Wind Turbine on 15m self supporting tilt-up mast. G83 -1 Connection to DNO(District network operator) grid via. G83 compliant SMA inverters. Inverter connected single phase.	6kW @ 12m/s (26.9mph)	• Ground Mounted. • Self supporting mast 15m • Grid Connected (1 ph)

For the turbine site Post code NR16 1AN The national wind speed data base indicates an average annual wind speed of 5.1m/s. Given this wind speed 'Proven Energy Limited supplied' generation data suggests an annual electricity generation of circa. 8,144 kWh Annual CO2 emissions saved 4,625kGs

System output has been calculated using Microgeneration Installation Standard 3003 methodology.
The performance of wind turbine systems is impossible to predict with any certainty due to the variability in the wind location to location and from year to year.

Any performance estimate calculation given here is for guidance only and will not be accurate for all situations. The factors given here are to estimate probable mean wind speeds above buildings of average height for the area. If the buildings are lower or higher than average, the mean wind speed will be correspondingly affected.

The performance of a wind turbine system in an urban environment is impossible to predict with any certainty due to the effect surrounding obstacles (buildings, etc.) have on the wind resource.
This estimate is based upon the best information but is given as guidance only and should not be considered as a guarantee. (Annual average wind speed Source BWEA NOABLE Database)

Solar Energy Alliance Ltd, 8 Battery Green Road, Lowestoft, Suffolk, NR32 1DE

e-mail info@solarenergyalliance.com web www.solarenergyalliance.com

Tel: 01502515532 MCS 1079

Limited Company Registered in England No:6391061

Page 1 of 5

The Low Carbon Partnership

REAL BERR Low Carbon Buildings Programme Phase 1 & 2 Installer Microgeneration Certification Scheme BRE GLOBAL LISTED

Quotation for a 6kW Proven Wind Turbine (Grid connected) on a 15m Free standing Tower.

Wind Turbine System	Turbine	1	Type : 6kW@12m/s (26.9mph)	£15,372.30
			Manufacturer: Proven Energy Ltd	
			Model: Proven 6/300	
			LCBP Ref. No. WT5002	
	Mast	1	Type: 15m self supporting tilt-up	
			Manufacturer: Proven Energy Ltd	
			Model: TM1500/6000	
			LCBP Ref. No: n/a	
	Turbine controller / rectifier with V&I Meters	1	Type : 300V Grid Connect TB controller / Rectifier	
			Manufacturer: Proven Energy Ltd	
			Model: ECM6004ME/300	
			LCBP Ref. No: n/a	
	Turbine Supply Cable	80meters	Type : 3-core SWA 16mm2	
			Manufacturer: n/a	
			Model: 3C/SWA/16mm2	
			LCBP Ref. No: n/a	
	TB Junction Box Lightning Protection	1	Type : Junction box & cable kit	
			Manufacturer: n/a	
			Model: TurbJunBox/ITPRO	
			LCBP Ref. No: n/a	
Grid Connect System G83 compliant	Inverters	2	Type : 3kW Inverters	£2,856.44
			Manufacturer: SMA Technologie AG	
			Model: WB-6000	
			LCBP Ref. No. WT19019	
	Other	1	Isolators, MCB, Total Gen Meter etc.	
Visual Display system	Visual Display System	N/a		£...
Ground Works & Foundations	Material and removal of spoil	1		£400.00
Installation	Groundworks & Foundations	1	Inst-GrWorks	£6,670.00
	Mechanical Installation	1	Inst-Mech	
	Electrical Installation	1	Inst-Elec	
	G83 Grid connection application	1	Grid-ConG83	
Delivery	Delivery: Turbine, materials etc.	1	6-Del	£495.55
Other	Local Plant Hire for ground works, foundations & mechanical installation	1	PL-Hire-GR&ME	£400.00
			Total Net	**£26,554.29**
			VAT @ 5%	**£ 1,327.72**
			Invoice Total	**£ 27,882.01**

Solar Energy Alliance Ltd, 8 Battery Green Road, Lowestoft, Suffolk, NR32 1DE

e-mail info@solarenergyalliance.com web www.solarenergyalliance.com

Tel: 01502515532 MCS 1079

Limited Company Registered in England No:6391061

Poppylot House Wymondham Road Bunwell Norfolk NR16 1NB
Email:cleanenergy@homecall.co.uk Tel: 07886 562483. Registered No: 6425356

Price and Payment

The price to install your selected small wind turbine system will be £26,554.29. (excluding VAT) and includes:

- System design
- Delivery
- Wind Turbine, Turbine mast and Turbine Controller
- Turbine foundations and ground works (including removal of excavation spoil)
- Turbine supply cable (and trenching for same)
- All wiring and connections
- Inverters
- Supply of all plant and equipment
- Full installation
- Commissioning, inspection and test.
- Generation kWh meter
- Notification to the network operator
- Owner's manuals
- Warranties

Payment schedule

This price is based on the following payment terms:

- 25% staged payment for design & preparation. Invoice issued on order placement.
- 75% payment on completion of installation – due 14 days from receipt of invoice.

Government Funding

You can apply for a grant of up to 50% of the direct installation costs under Phase 2 of the Low Carbon Buildings Programme.

To obtain a Phase 2 grant you need to have a contract with one of the appointed 'framework suppliers'. We are a registered installer with one of the framework suppliers, The Low Carbon Partnership, and for grant purposes you must contract with them.

However, we have an arrangement with The Low Carbon Partnership and the BRE, the administrators of the grant, that for all practical purposes you will deal with us directly. We will install the project, your payments will be direct to us and we will provide the warranty on the system.

The grant application can be done on-line at: http://www.lowcarbonbuildingsphase2.org.uk/

When making the application 'The Low Carbon Partnership' must be ticked as the framework supplier in Section B7 and the framework supplier reference entered as "**Not yet allocated**"

If you have any questions about the grant application please do not hesitate to contact us.

Once you have received a grant offer we will arrange the contracts with The Low Carbon Partnership.

Solar Energy Alliance Ltd, 8 Battery Green Road, Lowestoft, Suffolk, NR32 1DE

e-mail info@solarenergyalliance.com web www.solarenergyalliance.com

Tel: 01502515532 MCS 1079

Limited Company Registered in England No:6391061

Poppylot House Wymondham Road Bunwell Norfolk NR16 1NB
Email:cleanenergy@homecall.co.uk Tel: 07886 562483. Registered No: 6425356

Mains Power Failure

In event of a power cut or the mains power being switched off deliberately all grid connected electrical generation systems are required to automatically disconnect from the mains supply. This is to protect any engineers working on the electrical system from electrical hazard. When the power is restored the system automatically reconnects to the network.

Planning Consent

All our wind turbines require a full planning application to be submitted to your local planning authority and planning permission granted before commencement of the installation of your wind turbine system. We can supply planning packs containing the information generally required to make a planning application such as turbine elevation drawings, noise reports, planning guidance document.

Insurance

Our advice with reference to your building insurance is that you do need to inform your insurers of the installation. The addition of a Wind Turbine system should be viewed as a 'material fact' and policy holders have a duty to inform insurance companies. We have made enquiries with some of the large insurers as to whether this addition will change your premium, and their view is that the only way a wind turbine will increase the premium on a buildings insurance policy is if it is proven that it increases either the value of the property or its rebuild cost. Therefore it will be down to the insurance company as to how they view this.

The Turbine Location

Using the BWEA NOABLE wind speed data base, aerial views of your site and information gathered at our site visit, we have assessed your project as being suitable for the installation of a small wind turbine.

We would recommend employing an independent competent Engineer to inspect foundation bearing strata prior to placement of concrete.

Installation

We will install the free standing wind turbine system outlined above at the location discussed at site visit / detailed in your planning consent.

Before commencement of ground works you are required to confirm the ground has not been classified as contaminated and highlight all service in the area.

We also request a representative is on site at commencement of ground works to mark out site or sign off our marking out and confirm routing/location of cable runs, trenching, inverters etc.

The turbine controller, inverter and isolators will be installed in the plant room and we will require the running of one SWA turbine supply cable from the wind turbine to where the inverter are to be housed. The inverters will connect into 1 phase of your electrical supply, and will require spare MCB slots for us to connect into. This quote is on the basis that the connection point will be in the same room as the inverter is housed. The turbine system will be grid connected and we will complete all the paperwork and grid connection arrangements on your behalf.

System Design

Wind turbine system has been designed and will be installed in accordance with Energy Saving Trust document CE72 and Microgeneration Standard MIS3003 requirements for contractors undertaking the supply, design, installation, set to work, commissioning and handover of micro and small wind turbine systems

Terms and conditions

Solar Energy Alliance Ltd. Standard Terms and Conditions of Sale apply.

BERR PF31 Standard Terms and Conditions of contract for services apply.

BERR PF32 Standard Terms and Conditions of contract for supply apply.

(If you require copies of these documents we are happy to supply, please contact SEA at address below)

Warranties

Your wind turbine system will benefit from following warranties:

- 5 year Proven Energy wind turbine warranty.
- 5 year SMA inverter warranty.
- 2 year installation warranty.

This offer is open for 30 days. If the information in this offer letter is acceptable then please proceed with the grant application. If you have any questions please do not hesitate to contact us.

Yours sincerely,

Chris Goodings MD

Solar Energy Alliance Ltd, 8 Battery Green Road, Lowestoft, Suffolk, NR32 1DE

e-mail info@solarenergyalliance.com web www.solarenergyalliance.com

Tel: 01502515532 MCS 1079

Limited Company Registered in England No:6391061

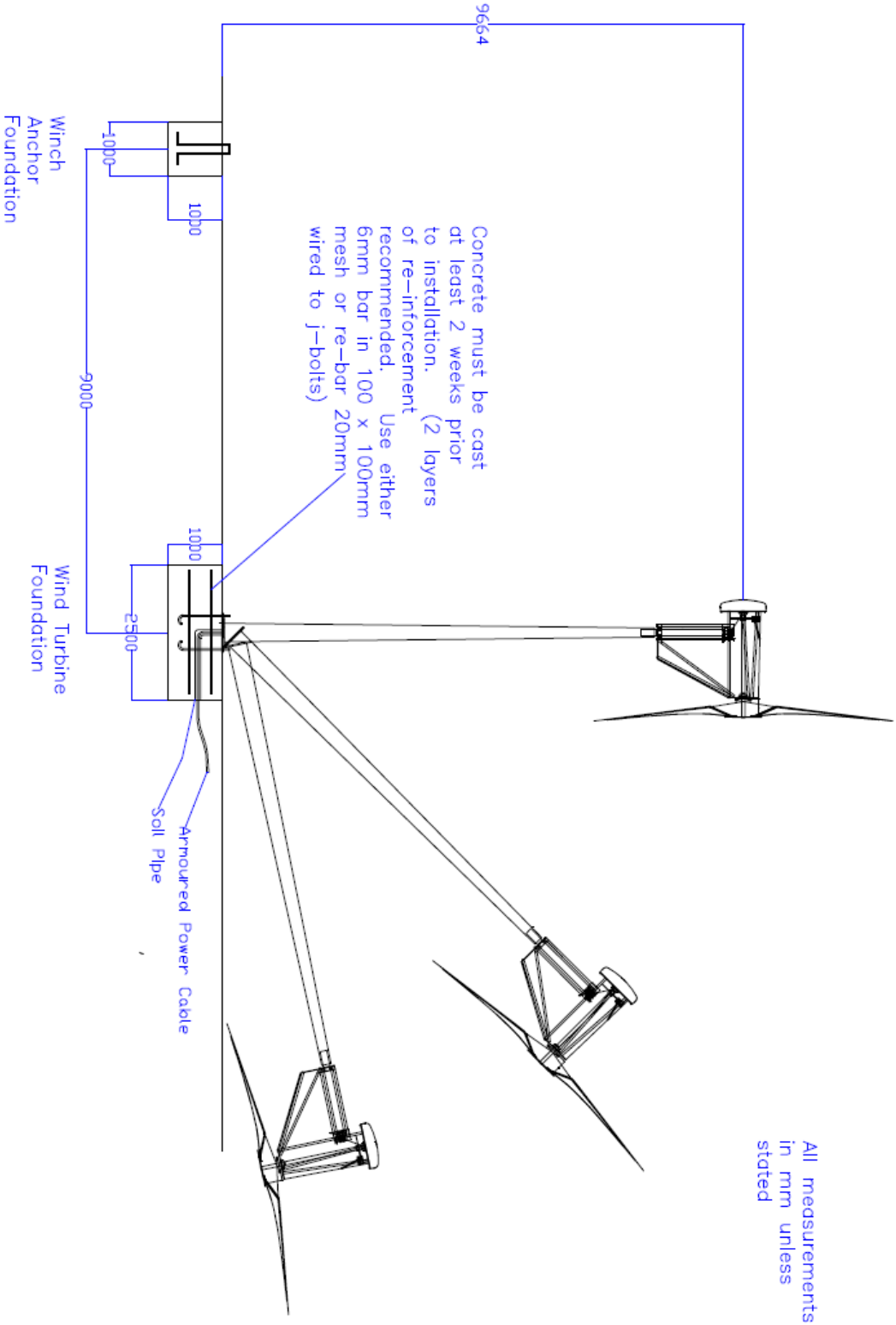

ZONE	REV	DESCRIPTION	DATE	APPROVED
-	-	REVISIONS	-	-
-	-	-	-	-
-	-	-	-	-

PREPARED BY BR | CHECKED BY

FSCM NO. | DWG NO. 6000 FO 006 rev 3.dwg | REV

SCALE | DATE 08/10/03 | SHEET sheet

PROVEN WIND TURBINES

Proven WT6000 Turbine with TM900 Self Supporting Tilt Up Tower (Side Elev)

The Proven 6.0 kW Turbine on a 15 Metre Mast

Image Courtesy of Solar Energy Alliance

Appendix 4

Renewable Technology Schematics

Solar PV Schematic

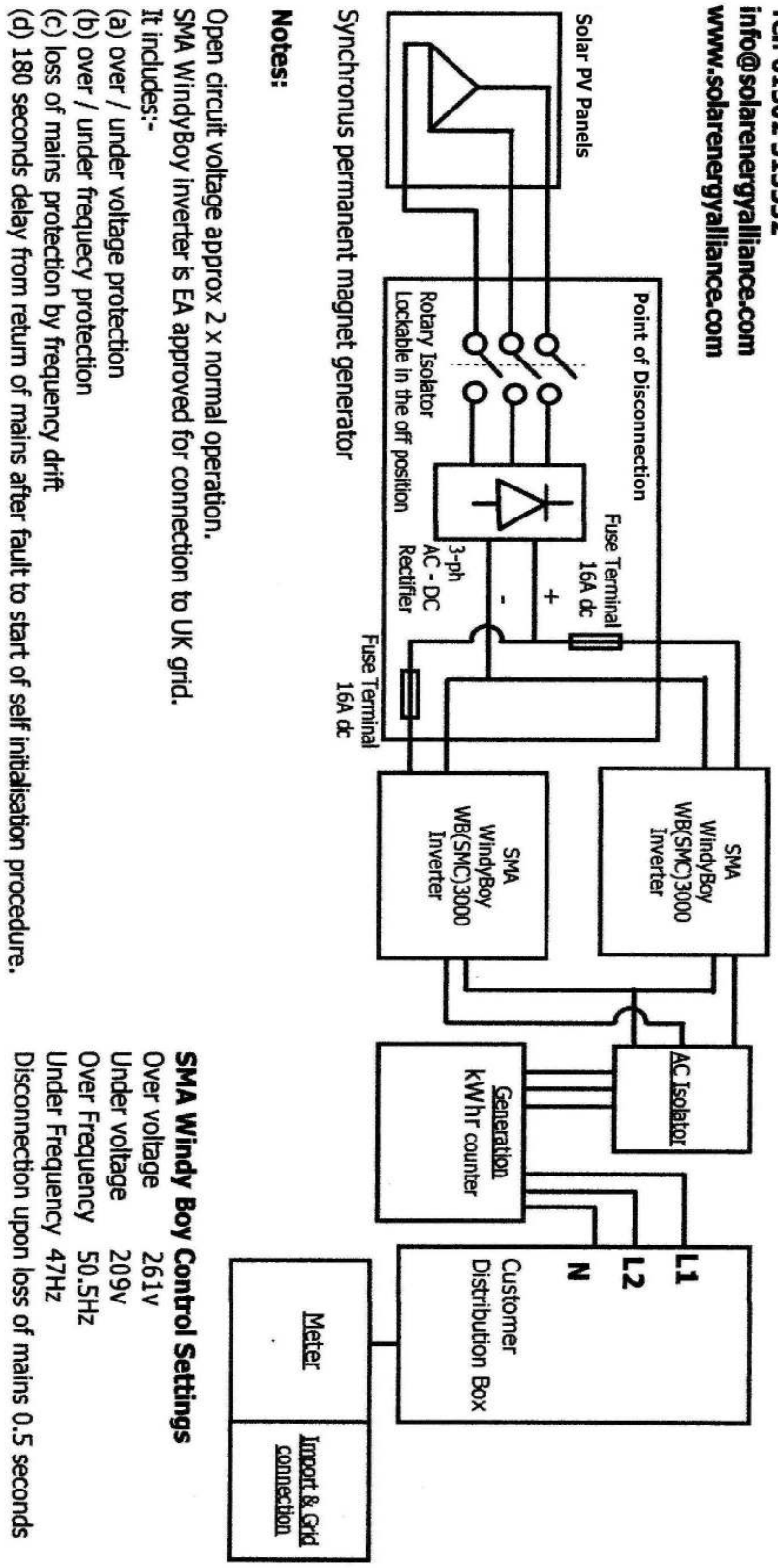

Turbine Schematic

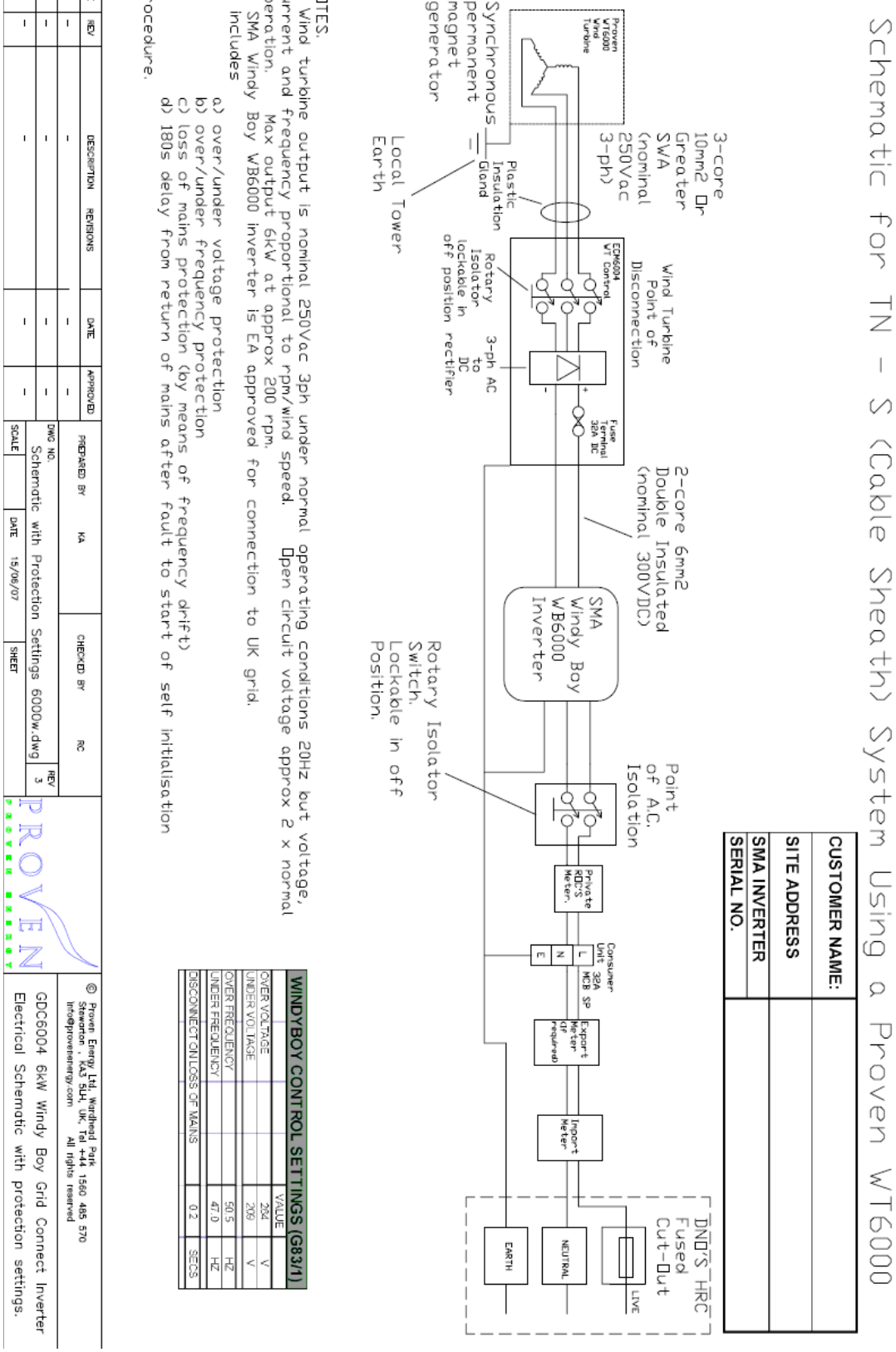

Appendix 5
Project Team Environmental Policies

Solar Energy Alliance Ltd

Solar Energy Alliance has over 20 years of experience installing and selling renewable energy products. Our aim is to provide information, services and products that will help redirect the world to a more sustainable future, where all living things are recognized as interconnected.

Our products provide tools that enable more sustainable lifestyles and energy self-sufficiency that is free from environmental abuse.
We encourage collaboration and co-operation with businesses, individuals and organisations who share our aims.

We try to communicate our goals in original and meaningful ways that are both intensely serious and full of fun. Using experimentation, invention and creative solutions, we strive to educate through our products, our communications and our example, that ethical businesses and simple, self-reliant lifestyles are the best way of sustaining the planet's limited resources.

As providers and installers of renewable energy equipment, we use our influence to protect and enhance the wider environment. We are committed to ensuring that the needs of our customers, business partners and staff are met in an environmentally responsible manner and will work with these stakeholders to promote good environmental practice.

We believe that good environmental practice is an integral part of how we run our business. We will therefore manage our impact on the environment, set targets, measure and continuously strive to improve our performance. We will regularly monitor, review and report our progress on these issues.

This policy applies to all of Solar Energy Alliance operations, locations, products and services.

Our business objectives are:

- *Providing a safe and healthy working environment for our staff and all those who use our products and services.*
- *Having regard to environmental considerations in the design, siting and management of all our activities.*
- *Complying with local, national and international regulations applicable to our business services and contributing to the development of new standards and controls that will lead to industry-wide improvements to environmental management.*
- *Minimising the consumption of energy and resources in our operations and where practical, using materials that are renewable, recycled or re-usable.*
- *Reducing the environmental impact of travel.*
- *Minimising waste generated from our operations and promoting recycling and re-use.*
- *Avoiding where possible, the use of substances that may cause harm to the environment, thereby minimising pollution to the environment across our operations.*
- *Working with suppliers to improve the environmental (and social) performance of the entire supply chain.*
- *To promote and use renewable energy wherever and whenever possible.*

We recognise our responsibilities.

Appendix 6

Energy Companies Contact Details

Ecotricity
Renewable Rewards Scheme
Freephone 08000 326 100. www.ecotricity.com
They will pay £0.13/unit for every unit generated irrespective of the sites consumption.

Good Energy
Becky Brown
Home Generation Scheme
Tel: 0845 456 1640 www.good-energy.co.uk
They will pay £0.15/unit for every unit generated irrespective of the sites consumption.

N Power Juice
Micro Generation Scheme
Tel: 01905 340646
Sue Warman www.npower.com

Scottish & Southern
Tony Collings
Tel: 02920 249302 www.scottish-southern.co.uk
They will pay £0.20/unit for every unit generated irrespective of the sites consumption.

Green Energy (UK) Plc
Sharon Watkins
Tel: 0845 456 9550 www.greenenergy.uk.com
They will pay £0.145/unit inc ROCs. Green Energy will assist the project by registering the charity for the ROCS with OFGEM.

OFGEM
0207 9017141
ROCS Dept www.ofgem.gov.uk

Appendix 7

Local NIA Insulation Installers

West Anglia Insulation Limited
3 Eastern Way
Bury St Edmunds
Suffolk
IP32 7AB

Approximately 19 miles away

Tel: 01284 727400
Fax: 01284 706048
E-mail: Click here
Web: http://www.wa-ltd.co.uk

Aran Services Limited
Units 3-6
The Old Station
Lower Green, Higham
Bury St Edmunds, Suffolk
IP28 6NL

Approximately 28 miles away

Tel: 01284 812520
Fax: 01284 811166
E-mail: Click here
Web: http://www.aranservices.co.uk

eaga Home Services Ltd
4b Cooper Drive
Springwood Industial Estate
Braintree
Essex
CM7 2RF

Approximately 29 miles away

Tel: 01376 334044
Fax: 01376 331101
E-mail: Click here
Web: http://www.eagainsulation.com

Anglian Insulation Limited
Frost Industrial Estate
Bidewell Close
Drayton
Norwich
NR8 6AP

Approximately 38 miles away

Tel: 01603 864458
Fax: 01603 864459
E-mail: Click here
Web: http://www.anglianinsulations.com

Appendix 8
Renewable Systems Details

Solar PV System Details
Solar Energy Alliance Certificate No: MSC 1079
Product Code: PMC 0495
Manufacturer: Sharp
Model: NU-180 E1
Size: 4.43 kW
No of Units: 24
Mono-crystalline
Roof Mounted (Pitched Roof)
Fixing Detail: Roof Mounting Frame
Shading Issues: None
Total System Size: 4.32kWp
Array Orientation: East
Angle of Tilt: 30 Deg
Est Annual Energy Yield: 3,340 kWh
Inverter Product Code: PIG 0005
Inverter Manufacturer: Fronius
Inverter Model: IG40
No of Inverters: 1
Total Inverter Peak Power Rating: 4.1 kW

Wind Turbine System Details
Solar Energy Alliance Certificate No: MCS 1079
Grid Connected
Free Standing Tower
Product Code: WT5002
Manufacturer: Proven
Model:Proven 6/300
Turbine Size: 6kW
Turbine Number: 1
Maximum System Power Output @ 11m/s: 5.73 kW
Estimated Annual Energy Yield: 8,144 kWh
Inverter Product Code: WT19019
Inverter Manufacturer: SMA technologies AG
Inverter Model: WB-6000
Inverter Size: 6,000Wp
No of Inverters: 2
Total Inverter Peak Power Rating: 5.5 kW
Turbine to Inverters Estimated Wiring Length: 80 metres
Inverters to Consumer Unit Estimated Wiring Length: 1 metre
Site Mean Windspeed: 5.1m/s (Source: National Windspeed Data Base)
Proposed Metering Arrangements: ROC/Schedule 7 Total Generation Meter